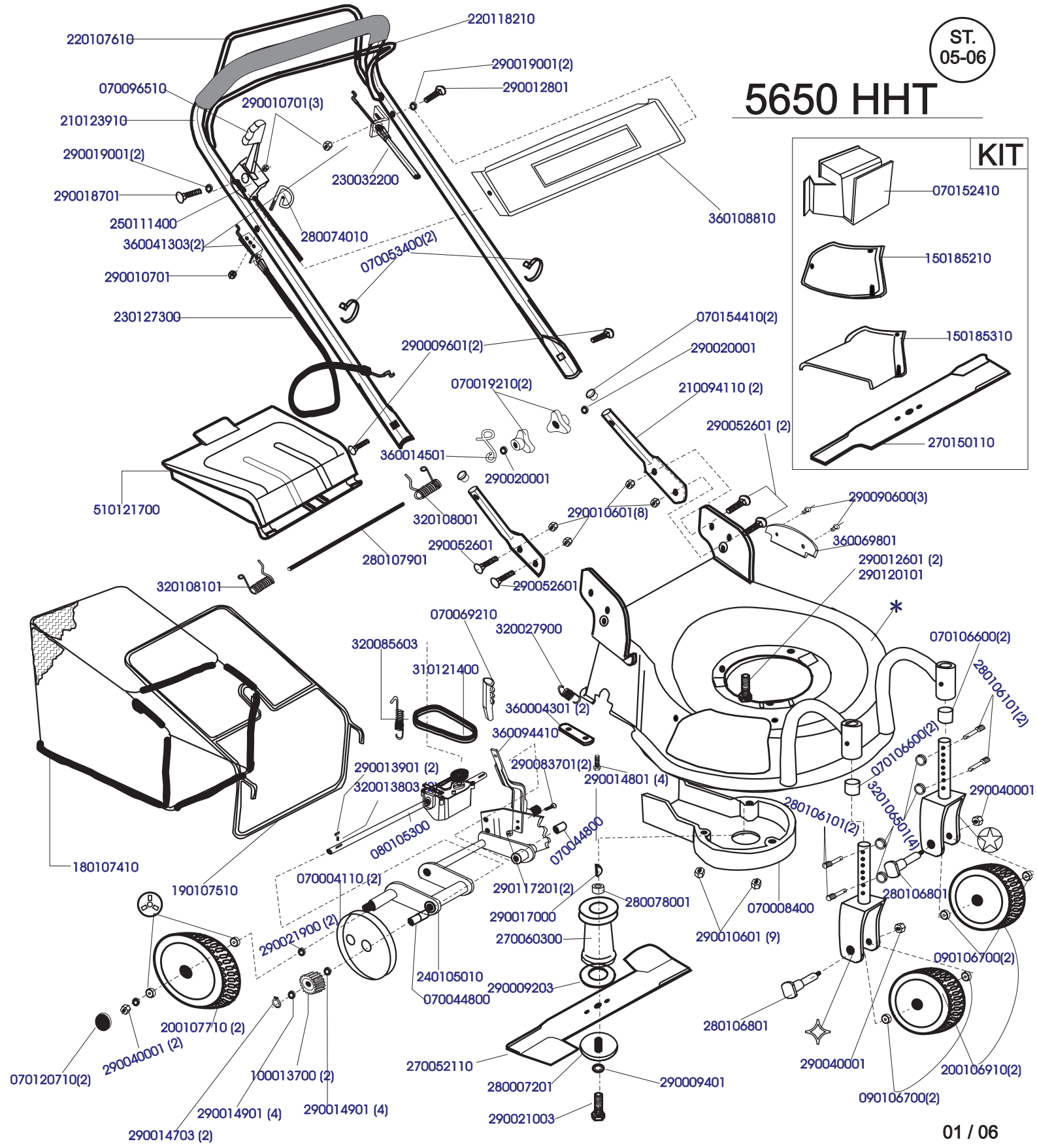COD.	MOD.	*				COD.CUSTOMER						
S04651	MAC 5552 360	110188526	090106700(4)	360118426	360106426	7138424